Suction capacity

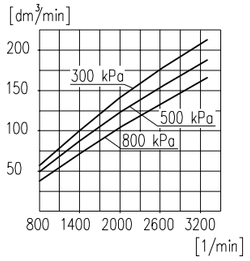

Power consumption

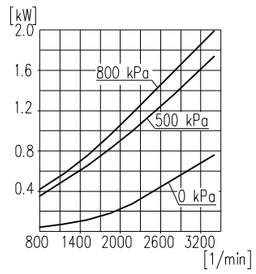

Time to fill a tank of 40dm³ capacity

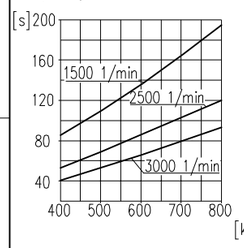

Max. r.p.m. for continuous duty

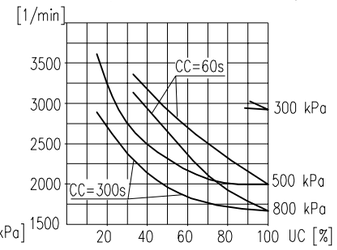

TECHNICAL DATA:

Number of cylinders	1	
Cylinder diameter	60	mm
Piston stroke	36	mm
Total piston displacement	100	cm³
Mass	8,4	kg
Working pressure	800	kPa
Max. pressure for short time duty	1000	kPa
Max. allowable temp. of compressed air	+220	°C
Cooling by inflation of, air with the speed of the stream min.	4	m/s
Lubrication forced circulation, splash lubrication min. pressure of oil	300±200	kPa
(The pressure drop down is allowed to min. during the idle running of the heated up engine)	60	kPa
Normal speed	max. 3000	1/min
Max. speed, temporary	3300	1/min

SYMBOLS DESCRIPTION:

0–suction connection
2–discharge connection
81–lubricating oil inlet
82–lubricating oil outlet and crankcase breathing

Digital marking according to International Standard ISO–6786
*–max. angular tilt of the compressor
T–Datum plate
** – Stoped by plug
* – max. angular deflection of the compressor

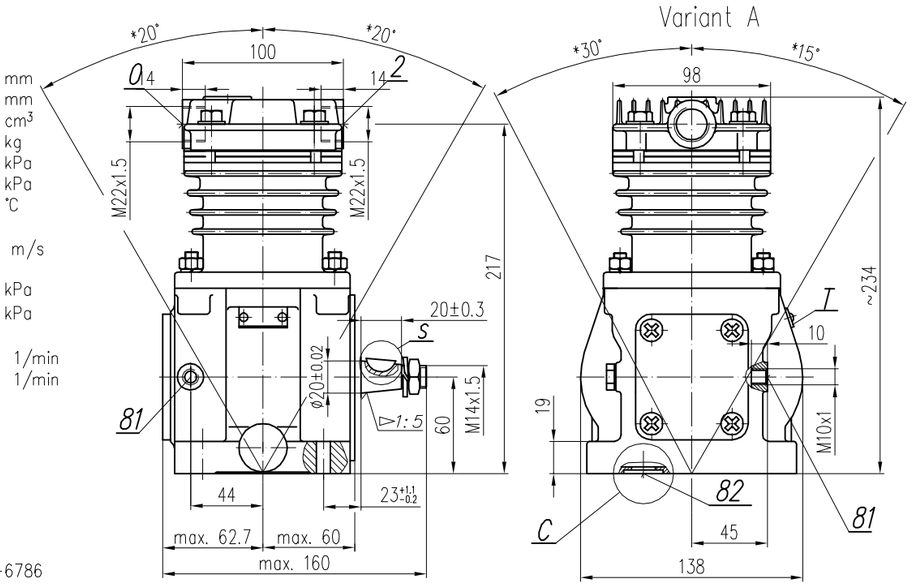

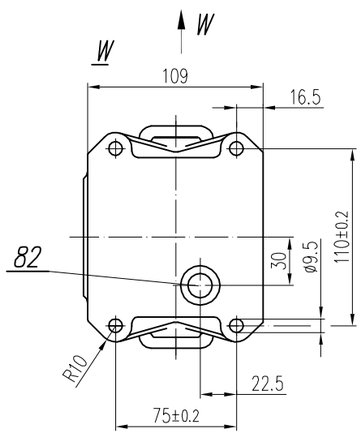

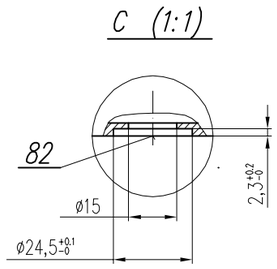

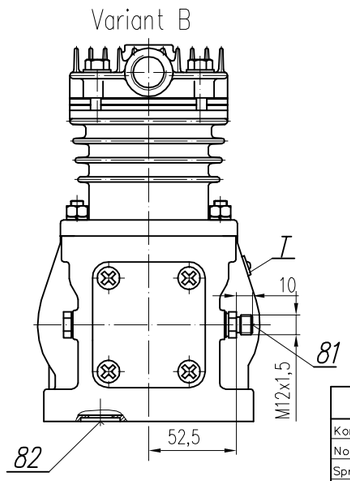

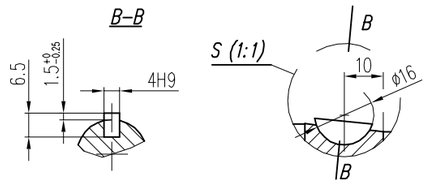

Compressor variants		
Scheme	Variant number: Variant A	Variant B
0 2	601.35.991 –	– 601.35.995
0 2	601.35.992 –	– 601.35.996
2 0	601.35.993 –	– 601.35.997
2 0	601.35.994 –	– 601.35.998

Description
2 Discharge port
0 Suction port

NOTE! The above characteristics are for open–inlet–valve control system at minimum cooling requirements and at ambient temperature +20°C

DEFINITIONS: CC=CT+CL – period of average operating cycle

$UC=\frac{CT}{CC}x100\%$ – percent ratio of compressor full load operating time in average operating cycle(also called percent duty cycle)

CL – compressor no–load operating time (exhaust to the atmosphere)

CT – compressor full load operating time

GENERAL TOLERANCES						
CLASS	RANGE OF NOMINAL DIMENTIONS (±)MM ≤50	>50 ≤180	>180 ≤400	≥400	∠	FORCE, POWER PRESSURE ETC.
II	1.0	2.0	3.0	4.0	±3°	±10 %

OFFER DRAWING

Konstr.	K.Malinowski		25.02.2010
Normaliz.	A.Wolnicki		
Sprawdził	A.Wolnicki		
Zatwierdził	A.Wolnicki		
Podziałka	Nazwa		
1:2.5	Compressor 601.35.991		

FABRYKA OSPRZĘTU SAMOCHODOWEGO
POLMO–Łódź S.A.
FOS Służba Rozwoju