Suction capacity

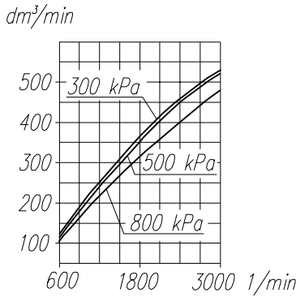

Power consumption

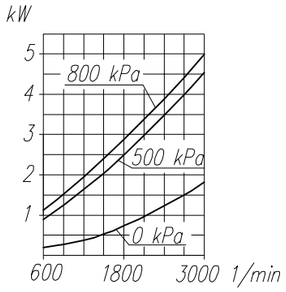

Time to fill a tank of 40dm³ capacity

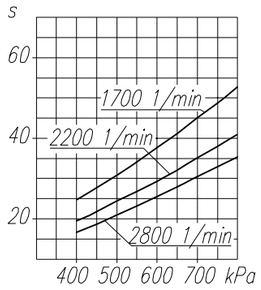

Max. r.p.m. for continuous duty

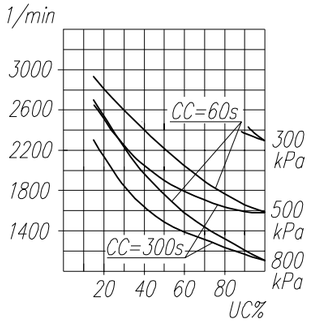

TECHNICAL DATA:

Number of cylinders	1	
Cylinder diameter	90	mm
Piston stroke	46	mm
Total piston displacement	293	cm^3
Mass	12	kg
Working pressure	800	kPa
Max. pressure for-short time load	1000	kPa
Max. allowable temp. of compressed air	+220	°C
Cooling by blow of air, with the speed of the flow min.	6	m/s
Lubrication: forced circulation, splash lubrication min. pressure of oil	200	kPa

SYMBOL DESCRIPTION:

0 – suction end (thread M26x1.5 length 15 mm)
2 – discharge end (thread M26x1.5 length 15 mm)
81 – lubricating oil inlet (thread M10x1 length 10 mm)
82 – lubricating oil outlet and crankcase breathing
Digital marking according to International Standard ISO-6786
T – rating plate
* – max. angular tilt of the compressor

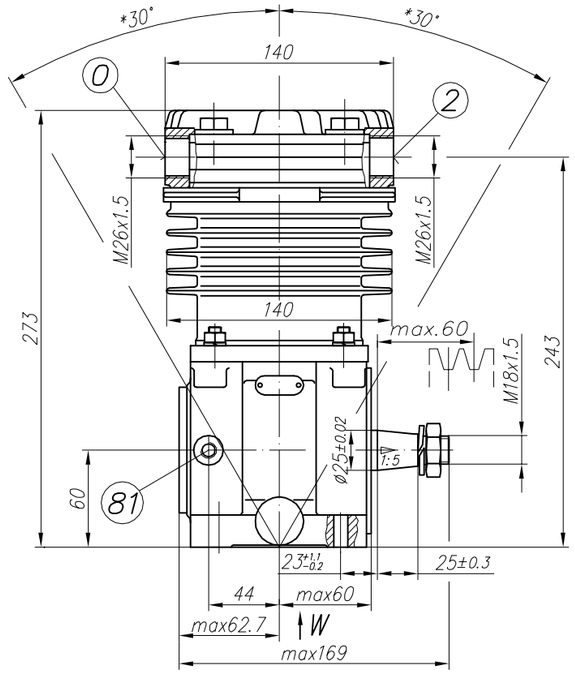

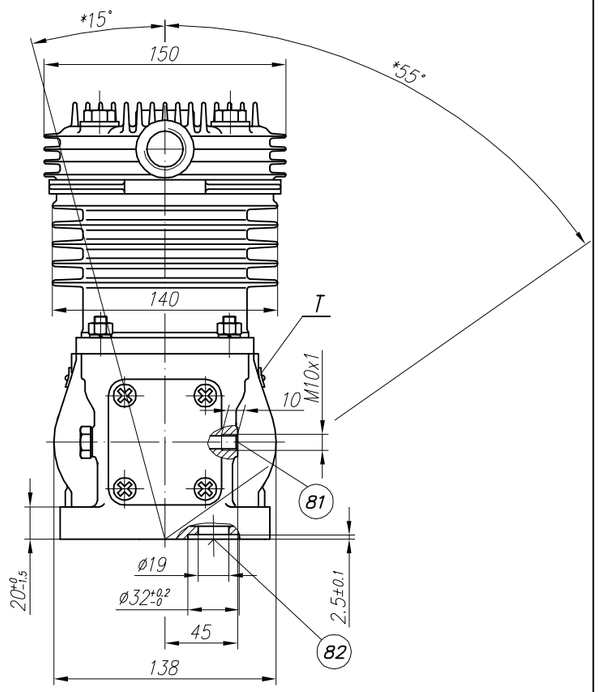

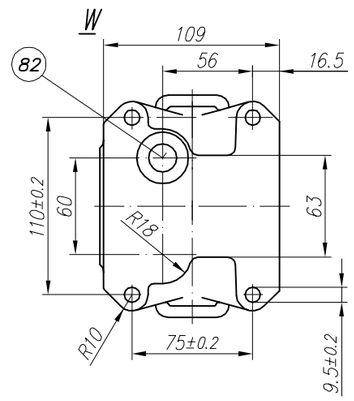

NOTE! The above characteristics are for open-inlet-valve control system at minimum cooling requirements and at ambient temperature +20°C

DEFINITIONS: CC=CT+CL – period of average operating cycle

$UC=\frac{CT}{CC}x100\%$ – percent ratio of compressor full load operating time in average operating cycle (also called percent duty cycle)

CL – compressor no-load operating time (exhaust to the atmosphere)

CT – compressor full load operating time

Replace: KHD 117 4472 KZ 8971-45; LK 1901, WABCO 411 043 800 0
Accuracy of the cone 1:5 AT∝9 PN-77/M-02136

OFFER DRAWING				
Konstr.	K.Szczepański		30.03.98	FABRYKA OSPRZĘTU SAMOCHODOWEGO POLMO-Łódź S.A. Służba Rozwoju
Normaliz.	L. Boryna			
Sprawdził	W.Lesiak			
Zatwierdził	B.Kleta			
Podziałka 1:2.5	Nazwa Compressor 601.28.923			