Suction capacity

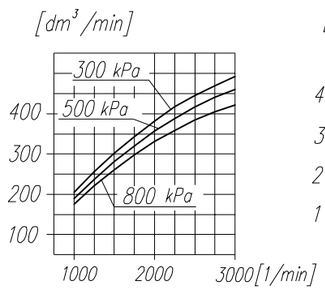


Power consumption

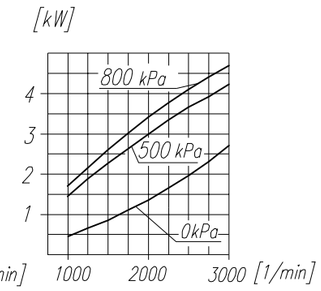


Time to fill a tank of 40 dm³ volume

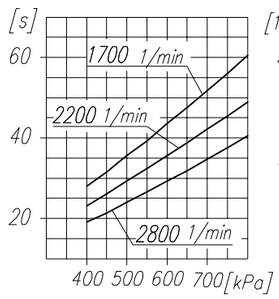


Max. r.p.m. for continuous duty

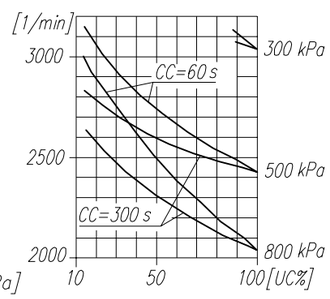


## TECHNICAL DATA:

| | | |
|---|---|---|
| Number of cylinders | 1 | |
| Cylinder diameter | 90 | mm |
| Piston stroke | 46 | mm |
| Total piston displacement | 293 | cm³ |
| Mass | 12.5 | kg |
| Working pressure | 800 | kPa |
| Max. pressure for short-time load | 1000 | kPa |
| Max. allowable temp. of compressed air | +220 | °C |
| Cooling by circuit of the water min. flow | 2 | dm³/min |
| temp. of water at the inlet max. | +85 | °C |
| Lubrication: forced circulation, splash lubrication at min. pressure of | 200 | kPa |

## SYMBOLS DESCRIPTION:

0 – suction end (thread M26x1.5 length 16 mm)
2 – discharge end (thread M26x1.5 length 16 mm)
81 – lubricating oil inlet (thread M10x1 length 10 mm)
82 – lubricating oil outlet and crankcase breathing (thread M22x1.5 length 12 mm)
91 – cooling water inlet (thread M16x1.5 length min. 14 mm)
92 – cooling water outlet (thread M22x1.5 length min. 14 mm)
Digital marking according to International Standard ISO-6786
T – rating plate
* – max. angular tilt of the compressor

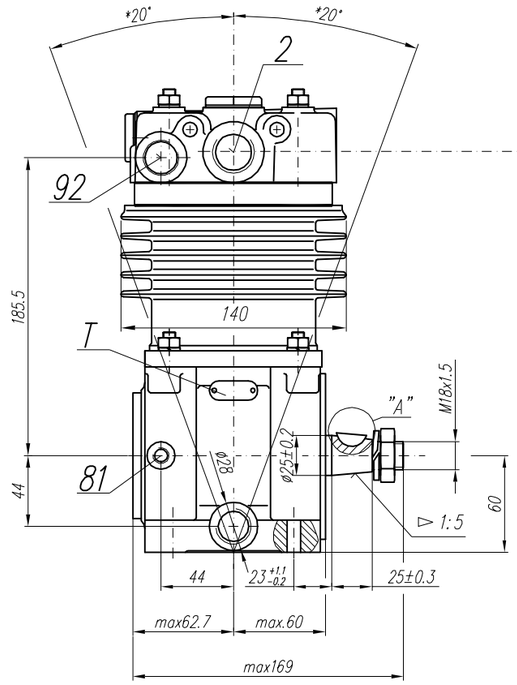


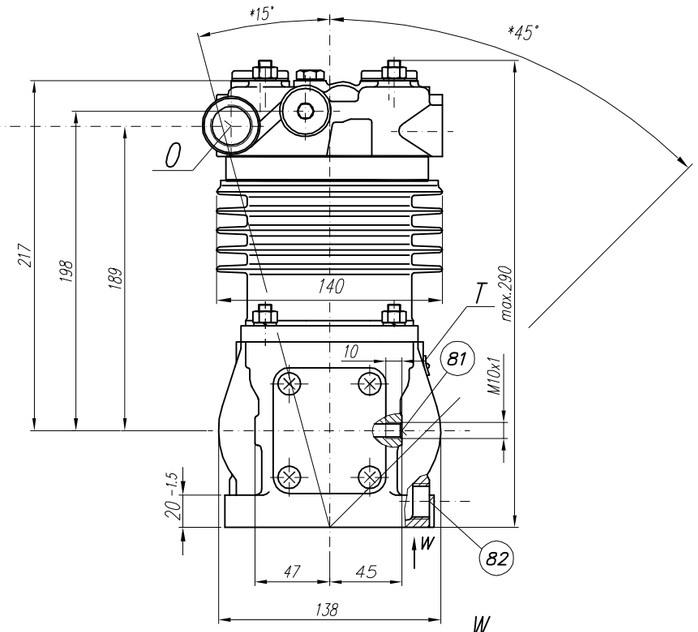


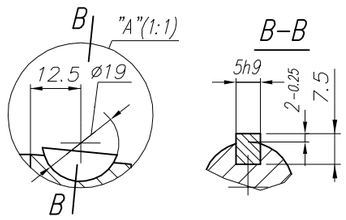


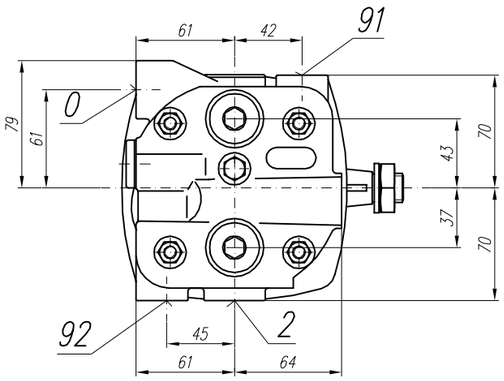


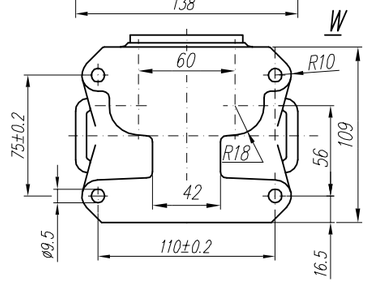


**NOTE!** The above characteristics are for open air suction system at ambient temperature +20°C and for cooling with fan

**DEFINITIONS:**

CC=CT+CL – period of compressor average operating cycle

$UC=\frac{CT}{CC}x100\%$ – percentage fraction of loaded compressor operating time in average operating cycle

CL – compressor no-load operating time (free blow-out to atmosphere)

CT – loaded compressor operating time

| OFFER DRAWING | | | | |
|---|---|---|---|---|
| Konstr. | K.Szczepański | | 03.02.98 | FABRYKA OSPRZĘTU SAMOCHODOWEGO POLMO-Łódź S.A. Dział Konstrukcji |
| Normaliz. | L. Boryna | | | |
| Sprawdził | W.Lesiak | | | |
| Zatwierdził | B.Kleta | | | |
| Podziałka 1:2.5 | Nazwa Compressor 601.27.924 | | | |