Suction capacity

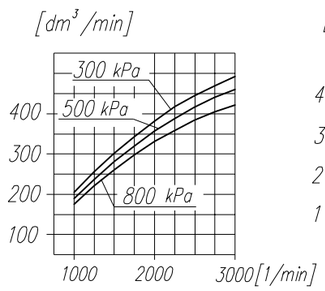

Power consumption

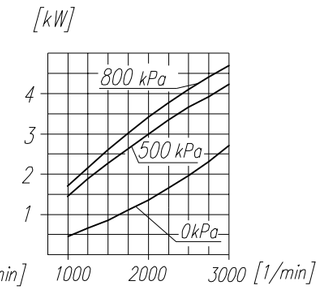

Time to fill a tank of 40 dm³ volume

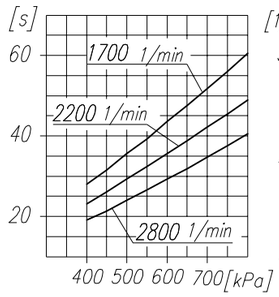

Max. r.p.m. for continuous duty

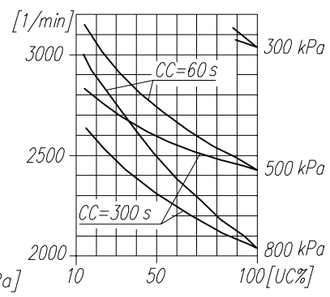

TECHNICAL DATA:

Number of cylinders	1	
Cylinder diameter	90	mm
Piston stroke	46	mm
Total piston displacement	293	cm³
Mass	12.5	kg
Working pressure	800	kPa
Max. pressure for short-time load	1000	kPa
Max. allowable temp. of compressed air	+220	°C
Cooling by circuit of the water min. flow	2	dm³/min
temp. of water at the inlet max.	+85	°C
Lubrication: forced circulation, splash lubrication at min. pressure of	200	kPa

SYMBOL DESCRIPTION:

0 – suction end (thread M26x1.5 length 16 mm)
2 – discharge end (thread M26x1.5 length 16 mm)
81 – lubricating oil inlet (thread M10x1 length 10 mm)
82 – lubricating oil outlet and crankcase breathing
91 – cooling water inlet (thread M22x1.5 length min. 14 mm)
92 – cooling water outlet (thread M22x1.5 length min. 14 mm)
Digital marking according to International Standard ISO-6786
T – rating plate
* – max. angular tilt of the compressor

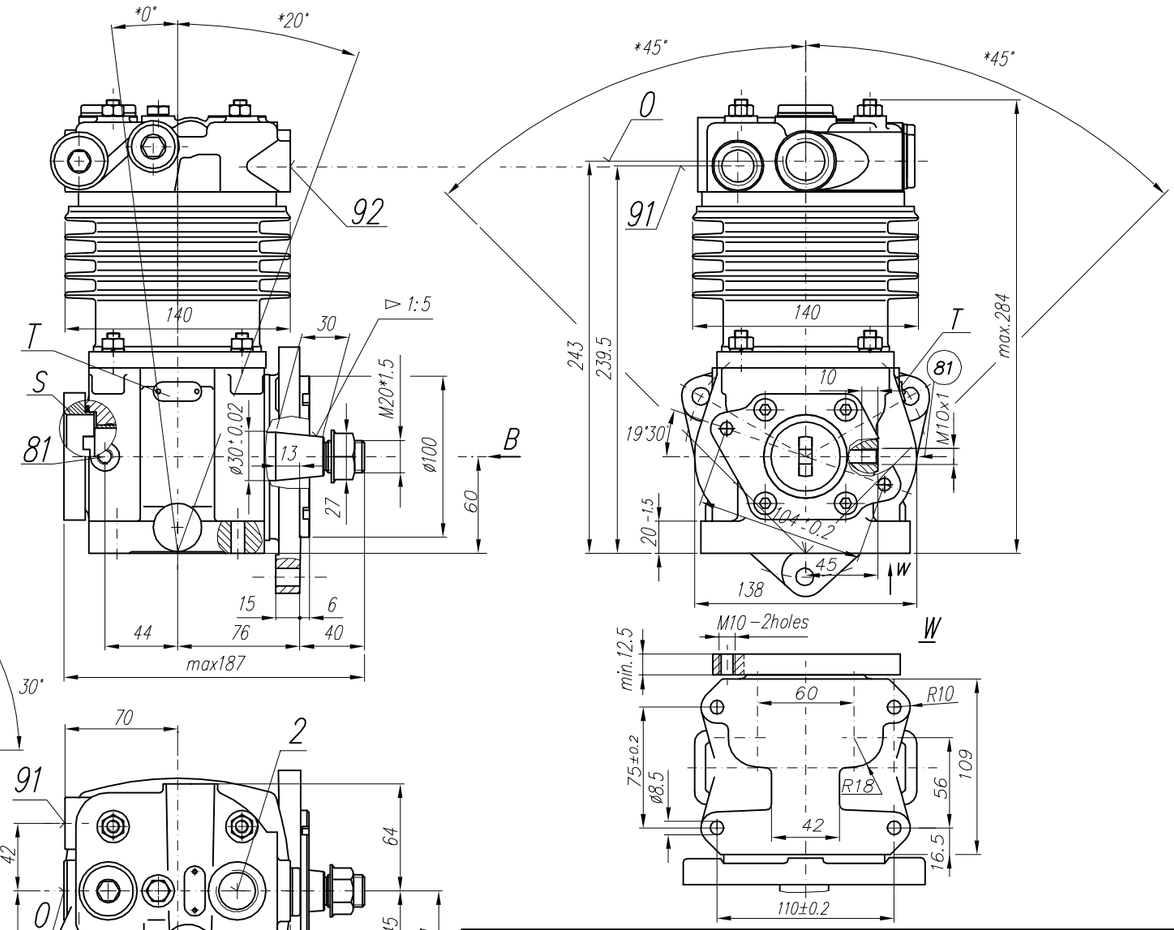

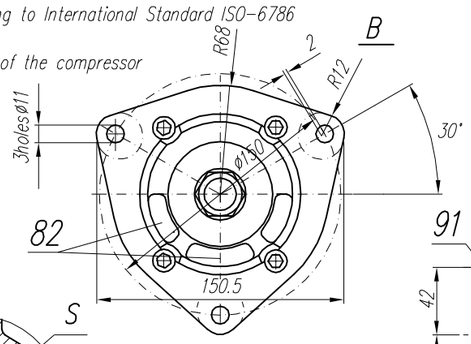

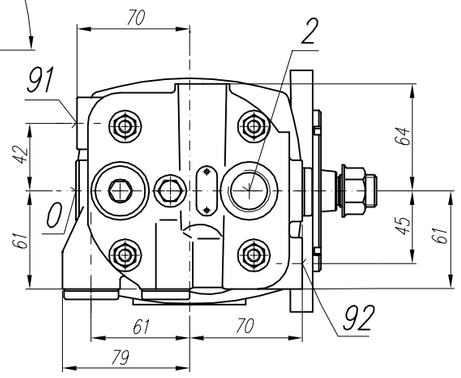

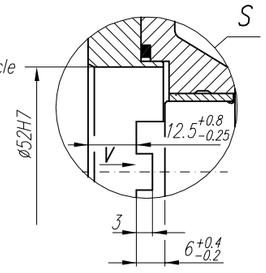

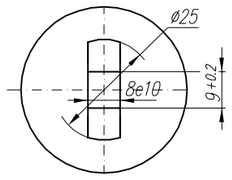

NOTE! The above characteristics are for open air suction system at ambient temperature +20°C and for cooling with fan

DEFINITIONS:

CC=CT+CL – period of compressor average operating cycle

$UC=\frac{CT}{CC}\times 100\%$ – percentage fraction of loaded compressor operating time in average operating cycle

CL – compressor no-load operating time (free blow-out to atmosphere)

CT – loaded compressor operating time

Zmiana x ilo??	data	ax		bx		cx	Fabryka Osprzetu Samochodowego POLMO-t?d« SA DZIAł ROZWOJU
nr wprow.zmiany							
zm. wprowadził							
Konstr. Szczepański		Mat. akcept.			Masa	kg	Materia?
Kre?li? Szczepański		Normaliz. Boryna			Format 3xA4		
Sprawdz. Lesiak		Zatw. Kleta		dn. 16.10.96			wg normy
Podzia?ka 1:2.5	Nazwa Compressor						Nr rys. 601.27.916