Suction capacity [dm³/min]

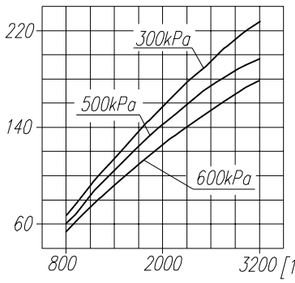

Power consumption [kW]

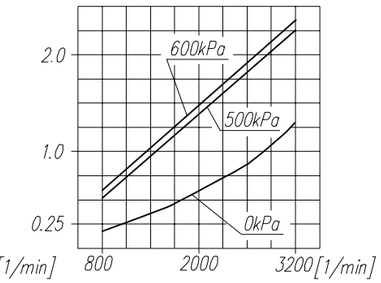

Time to fill a tank of 40dm³ capacity

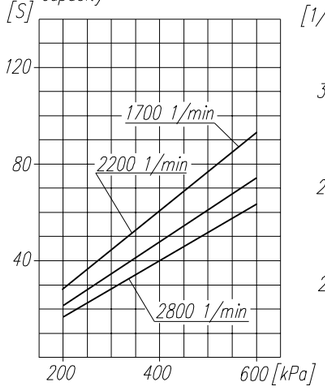

Max. r.p.m. for continuous duty [1/min]

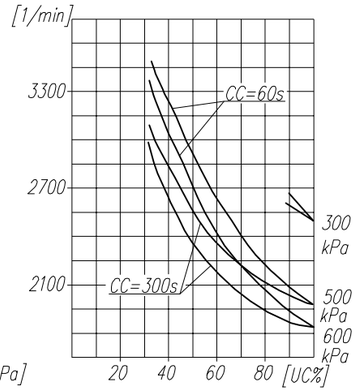

TECHNICAL DATA:

Number of cylinders	1	
Cylinder diameter	60	mm
Piston stroke	40	mm
Total piston displacement	113	cm³
Mass	11.2	kg
Working pressure	800	kPa
Max. pressure for short time duty	1000	kPa
Max. allowable temp. of compressed air	+220	°C
Cooling by inflation of air, with the speed of the stream min.	4	m/s

Lubrication fog of the oil from engine

SYMBOLS DESCRIPTION:

0 – suction connection
2 – discharge connection

Numeral signs according to International Standard ISO-6786
T – rating plate
S – The checking hole of lubrication blind with screw M6

NOTE! The above characteristics are for open-inlet-valve control system at minimum cooling requirements and at ambient temperature of +20°C

DEFINITIONS:

CC=CT+CL – period of average operating cycle

$UC=\frac{CT}{CC}x100\%$ – percent ratio of compressor full load operating time in average operating cycle (also called percent duty cycle)

CL – compressor no-load operating time (exhaust to the atmosphere)

CT – compressor full load operating time

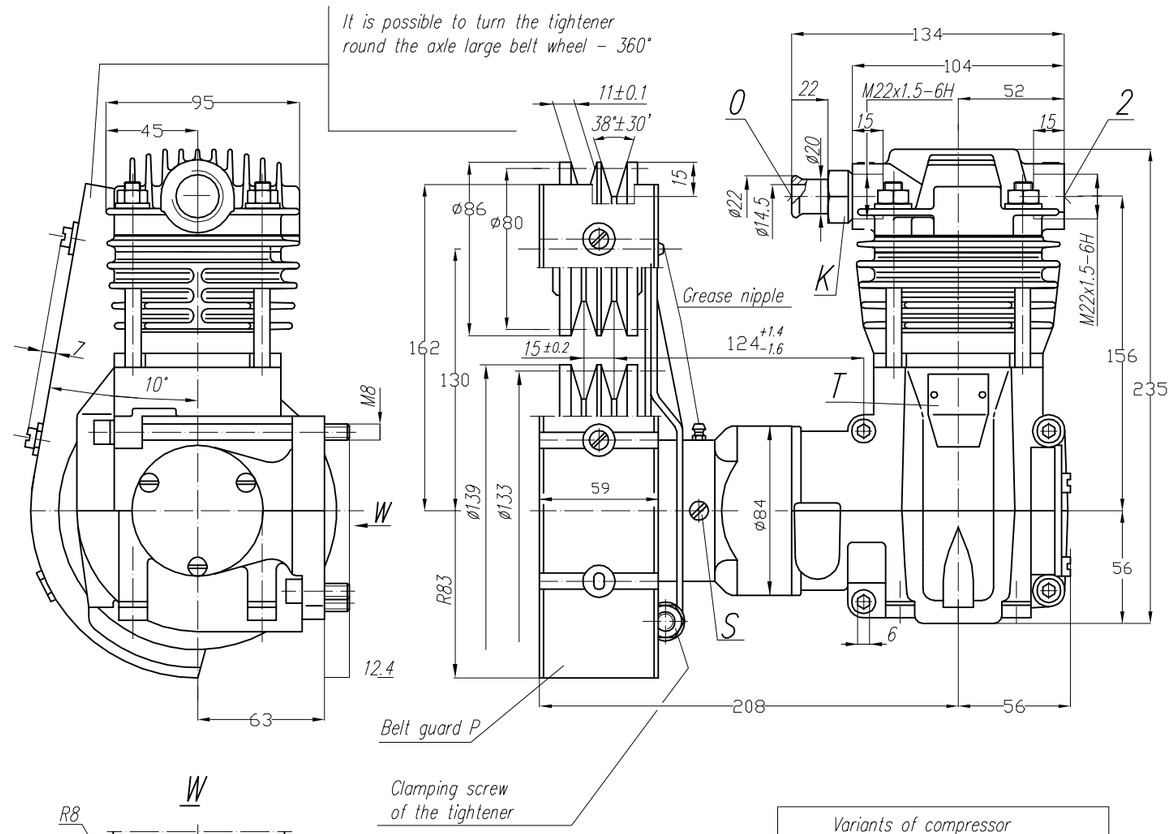

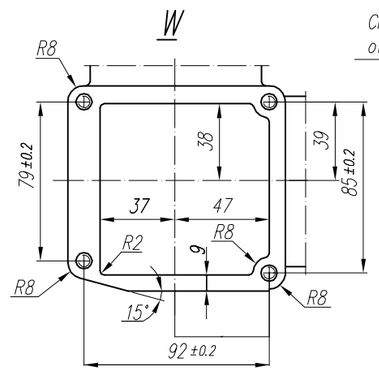

Variants of compressor	
601.26.911	acc. drawing
601.26.912	without belt guard P
601.26.913	without of the terminal K

OFFER DRAWING

Konstr.	Wieczorek		03.07.91
Normaliz.	L. Boryna		
Sprawdził	Falba		
Zatwierdził	Lach		
Podziałka	Nazwa		
1:2	Compressor 601.26.911		

FABRYKA OSPRZĘTU SAMOCHODOWEGO POLMO-Łódź S.A. FOS Służba Rozwoju