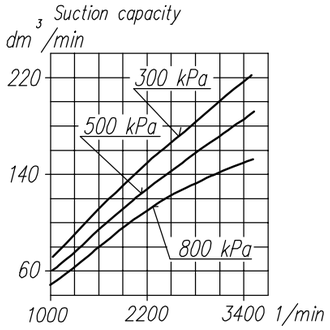

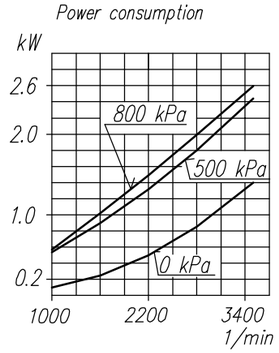

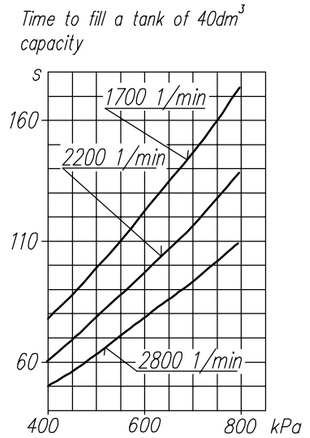

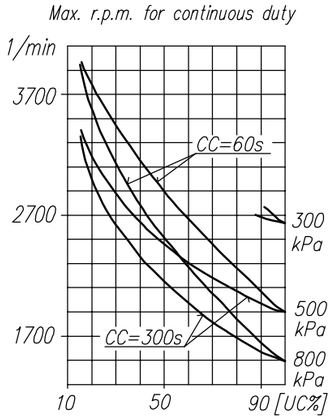

TECHNICAL DATA:

Number of cylinders	1	
Cylinder diameter	60	mm
Piston stroke	38	mm
Total piston displacement	107	cm^3
Mass	6.2	kg
Working pressure	800	kPa
Max. pressure for short time duty	1000	kPa
Max. allowable temp. of compressed air	+220	°C
Cooling by inflation of air, with the speed of the stream min.	4	m/s

Lubrication: individual splash lubrication with motor oil poured into the crankcase; oil volume about 140 cm^3

SYMBOLS DESCRIPTION:

0 – suction connection
2 – discharge connection
3 – breather
81 – oil inlet
82 – oil outlet
Numeral signs according to International Standard ISO-6786
Z – compressor symbol and production date

ASSEMBLING VARIANTS	SKETCH
601.23.951	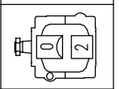
601.23.952	

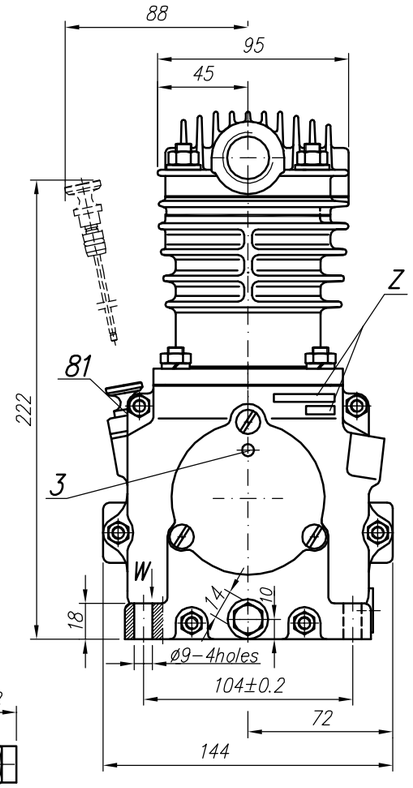

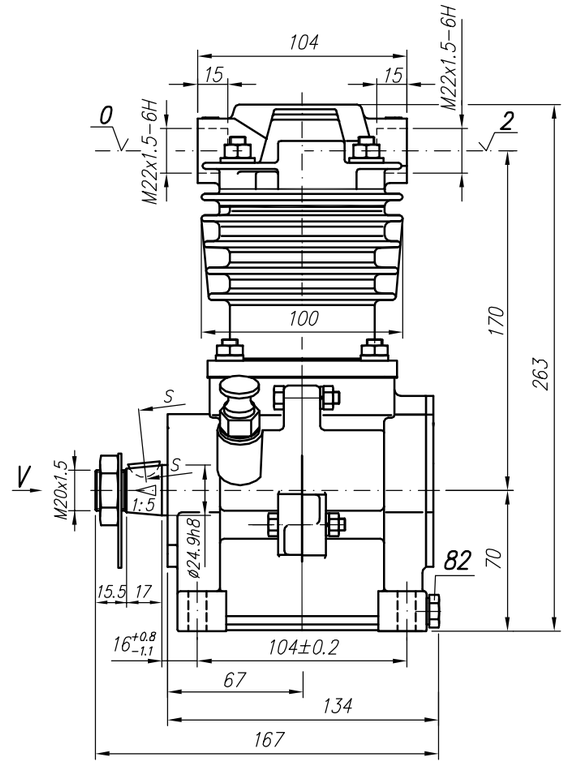

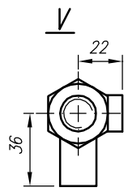

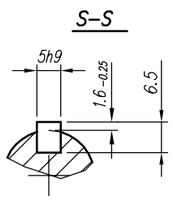

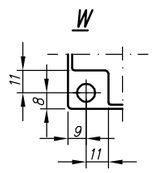

NOTE! The above characteristics are for open-inlet-valve control system at minimum cooling requirements and at ambient temperature +20°C

DEFINITIONS: CC=CT+CL – period of average operating cycle

$UC=\frac{CT}{CC}x100\%$ – percent ratio of compressor full load operating time in average operating cycle(also called percent duty cycle)

CL – compressor no-load operating time (exhaust to the atmosphere)

CT – compressor full load operating time

OFFER DRAWING				
Konstr.	J.Ustyniak		11.04.2003	FABRYKA OSPRZĘTU SAMOCHODOWEGO POLMO-Łódź S.A. Służba Rozwoju
Normaliz.	A.Walnicki			
Sprawdził	W.Lesiak			
Zatwierdził				
Podziałka 1:2	Nazwa Compressor 601.23.951			