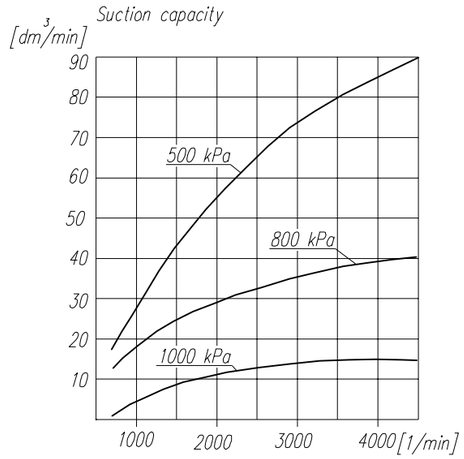

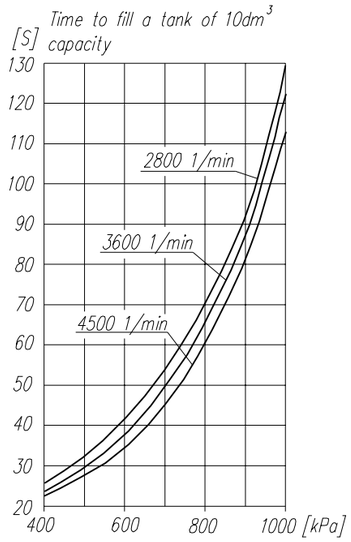

TECHNICAL DATA:

Number of cylinders	1	
Cylinder diameter	65	mm
Piston stroke	23	mm
Total piston displacement	76	cm^3
Mass	6.5	kg
Self-stabilizing pressure	1200^{+200}_{-100}	kPa
Max. allowable temp. of compressed air	+220	°C
Cooling by inflation of air, with the speed of the stream min.	6	m/s
Lubrication forced circulation, splash lubrication min. pressure of oil	200	kPa

SYMBOLS DESCRIPTION:

0 – suction connection
2 – discharge connection
81 – lubricating oil inlet
82 – lubricating oil outlet and crankcase breathing
Numeral signs according to International Standard ISO-6786
T – rating plate
* – max. angular deflection of the compressor

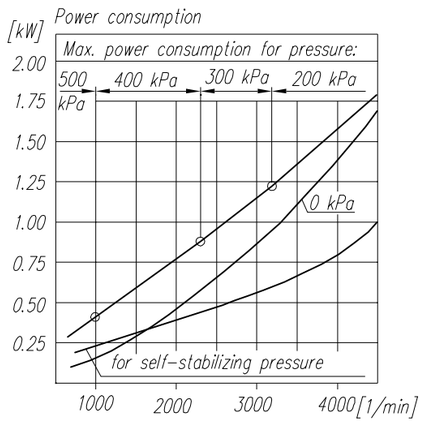

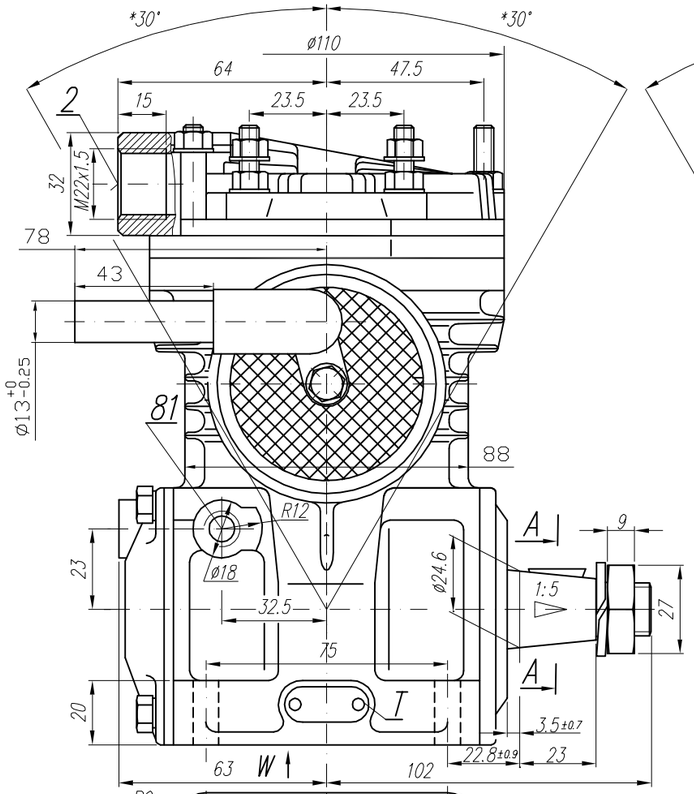

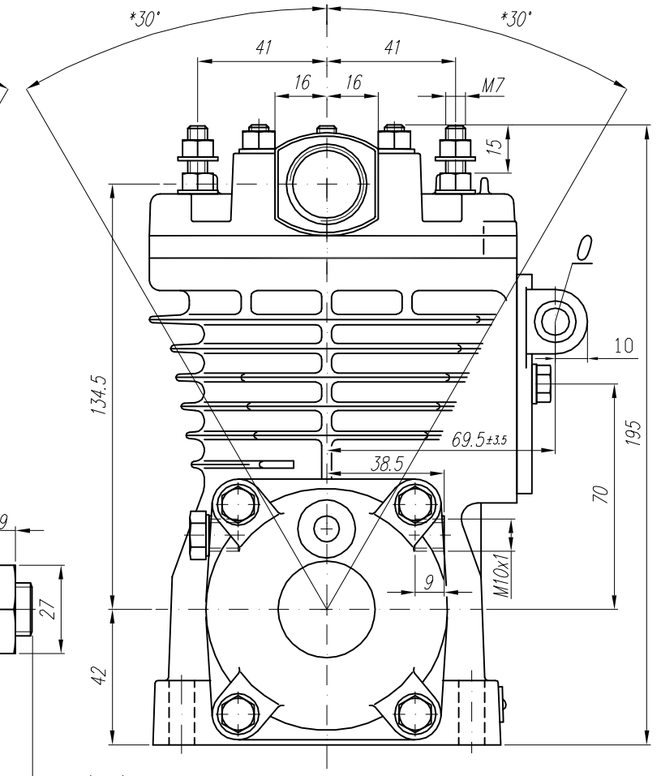

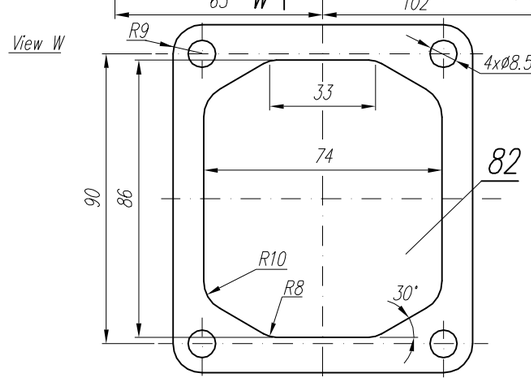

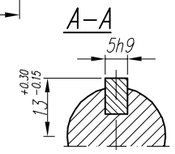

GENERAL TOLERANCES						
CLASS	RANGE OF NOMINAL DIMENTIONS (±)MM ≤50	>50 ≤180	>180 ≤400	≥400	∢	FORCE, POWER PRESSURE ETC.
II	1.0	2.0	3.0	4.0	±3°	±10 %

NOTE! The above characteristics are for open-inlet-valve control system at minimum cooling requirements and at ambient temperature +20°C

OFFER DRAWING

Konstr.	K.Molinowski		27.11.2003
Normaliz.	A. Wolnicki		
Sprawdził	W.Lesiak		
Zatwierdził	W.Lesiak		
Podziałka	Nazwa		
1:1	Compressor 901.17.952		

FABRYKA OSPRZĘTU SAMOCHODOWEGO
POLMO-Łódź S.A.
FOS
Dział Konstrukcji