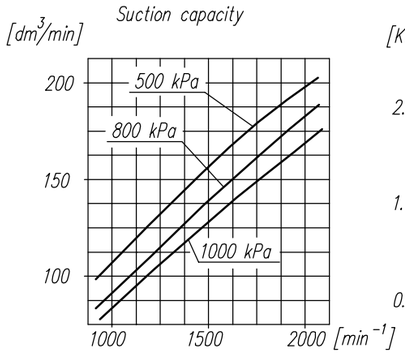

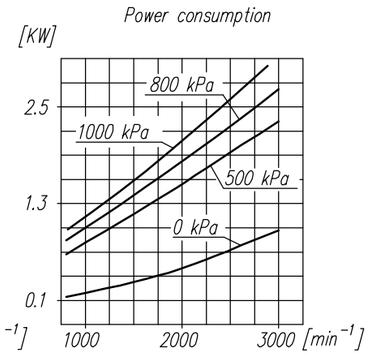

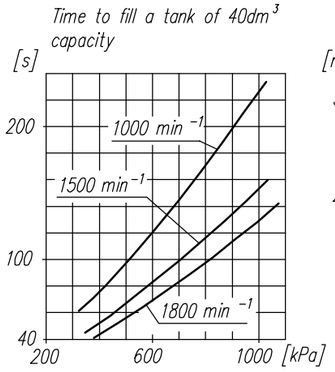

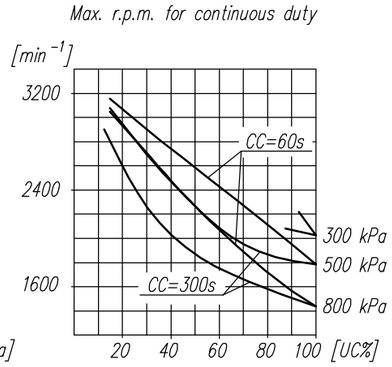

TECHNICAL DATA:

Number of cylinders	1
Cylinder diameter	ø75 mm
Piston stroke	38 mm
Total piston displacement	168 cm³
Mass	~8,0 kg
Working pressure	≤ 800 kPa
Max. pressure for short time duty	≤ 1000 kPa
Max. allowable temp. of compressed air	≤ +220 °C
Cooling by inflation of air, with the speed of the stream min.	4 m/s
Lubrication indyvidual splash lubrication with motor oil poured into the crankcase; oil volume about	140 cm³

SYMBOLS DESCRIPTION:

0 – suction connection
2 – discharge connection
3 – breather
81 – oil inlet
82 – oil outlet
Numeral signs according to International Standard ISO–6786
Z – compressor symbol and production date
** – max. angular deflection of the compressor

DEFINITIONS:

CL – compressor no–load operating time (exhaust to the atmosphere)

CT – compressor full load operating time

CC=CT+CL – period of average operating cycle

$UC=\frac{CT}{CC}x100\%$ – percent ratio of compressor full load operating time in average operating cycle (also called percent duty cycle)

NOTE !

The above charakteristics are for open–inlet–valve control system at minimum cooling requirements and at ambient temperature +20° C.

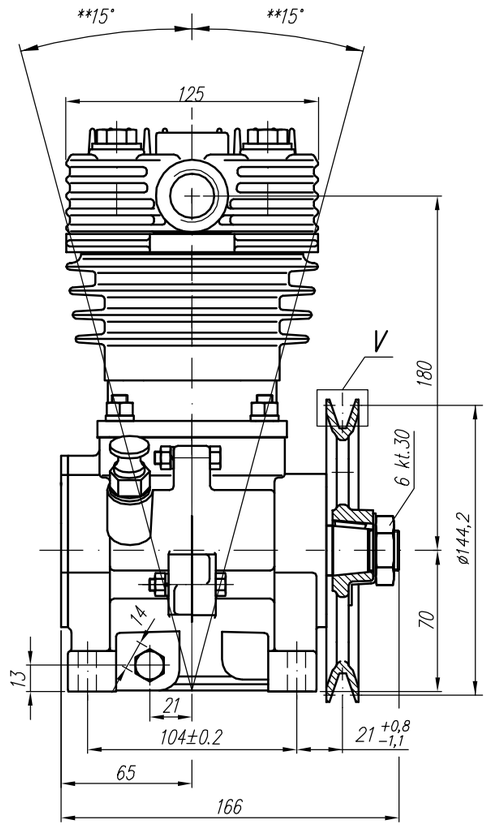

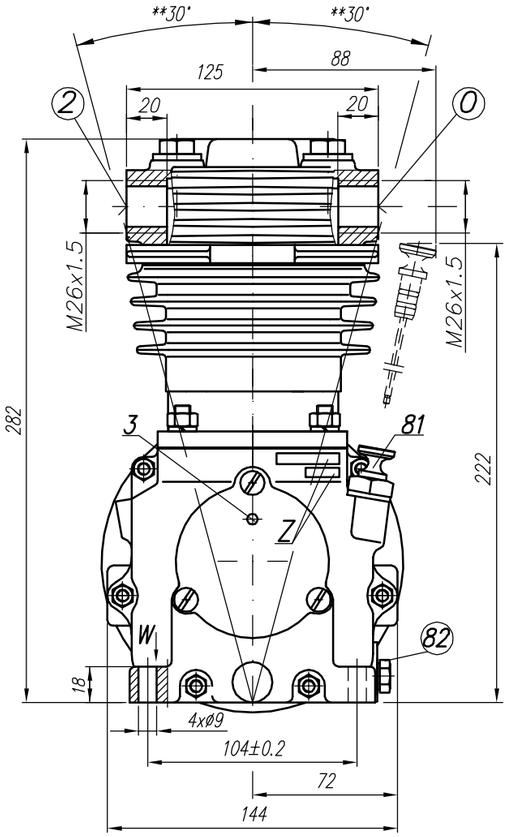

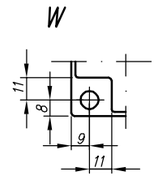

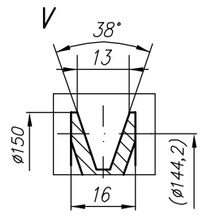

OFFER DRAWING				
Konstr.	J.Ustyniak		18.10.2005r.	FABRYKA OSPRZĘTU SAMOCHODOWEGO POLMO–Łódź S.A. Dział Konstrukcji
Normaliz.	A.Wolnicki			
Sprawdził	A.Wolnicki			
Zatwierdził				
Podziałka 1:2	Nazwa Compressor			601.15.906