Suction capacity

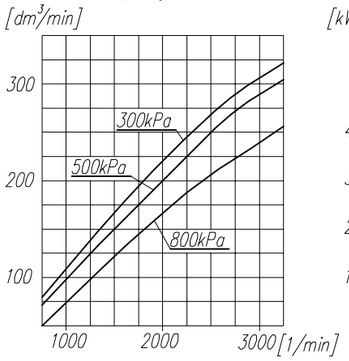

Power consumption

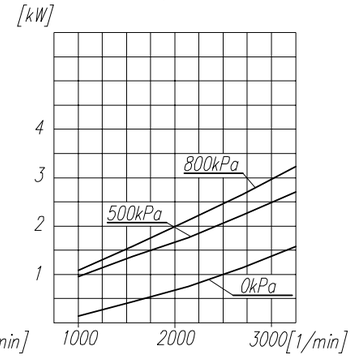

Time to fill a tank of 40dm³ capacity

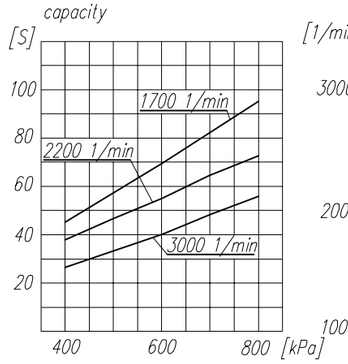

Max. r.p.m. for continuous duty

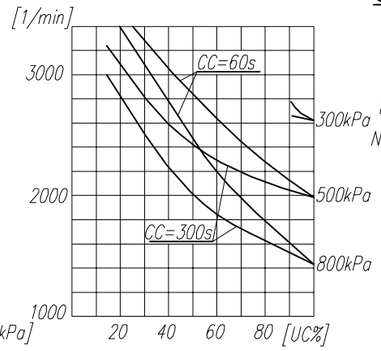

TECHNICAL DATA:

Number of cylinders	1	
Cylinder diameter	75	mm
Piston stroke	36	mm
Total piston displacement	159	cm^3
Mass	10	kg
Working pressure	800	kPa
Max. pressure for short time duty	1000	kPa
Max. allowable temp. of compressed air	+220 °C	
Cooling by inflation of air, with the speed of the stream min.	4	m/s
Lubrication forced circulation, splash lubrication min. pressure of oil	300±200	kPa
(The pressure drop down is allowed to min. during the idle running of the heated up engine)	60	kPa

SYMBOLS DESCRIPTION:

0 – suction connection
2 – discharge connection
81 – lubricating oil inlet
82 – lubricating oil outlet and crankcase breathing
Numeral signs according to International Standard ISO-6786
T – rating plate
* – max. angular deflection of the compressor

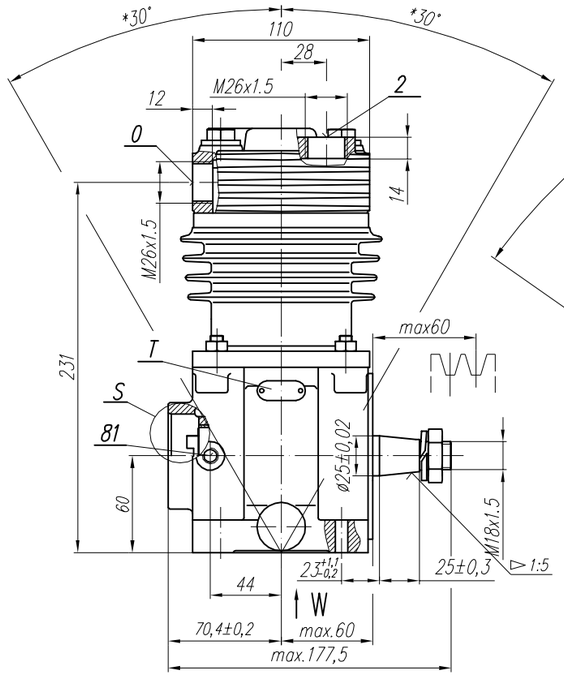

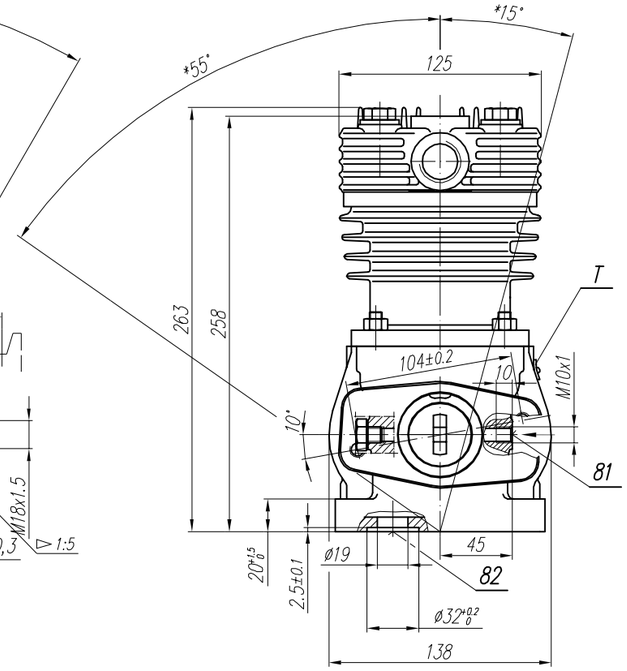

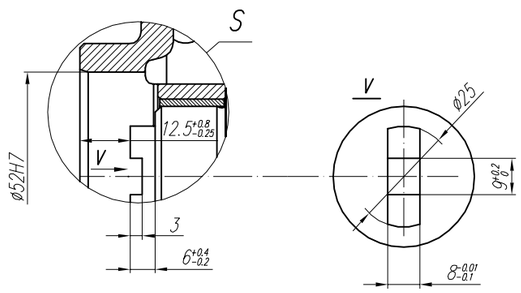

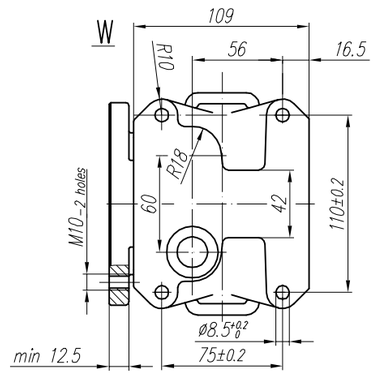

NOTE! The above characteristics are for open-inlet-valve control system at minimum cooling requirements and at ambient temperature +20°C

DEFINITIONS: CC=CT+CL – period of average operating cycle

$UC=\frac{CT}{CC}x100\%$ – percent ratio of compressor full load operating time in average operating cycle(also called percent duty cycle)

CL – compressor no-load operating time (exhaust to the atmosphere)

CT – compressor full load operating time

Accuracy of the cone:1:5 ATα 9 PN-77/M-02136
Replace: LK 1511

GENERAL TOLERANCES						
CLASS	RANGE OF NOMINAL DIMENTIONS (±)MM ≤50	>50 ≤180	>180 ≤400	≥400	◁	FORCE, POWER PRESSURE ETC.
II	1.0	2.0	3.0	4.0	±3°	±10 %

OFFER DRAWING

Konstr.	K.Malinowski		10.04.2001
Normaliz.	L. Boryna		
Sprawdził	W.Lesiak		
Zatwierdził	B.Kleta		
Podziałka 1:2.5	Nazwa Compressor 601.09.915		

FABRYKA OSPRZĘTU SAMOCHODOWEGO POLMO-Łódź S.A. FOS Służba Rozwoju